PARTS

(1) Hardware

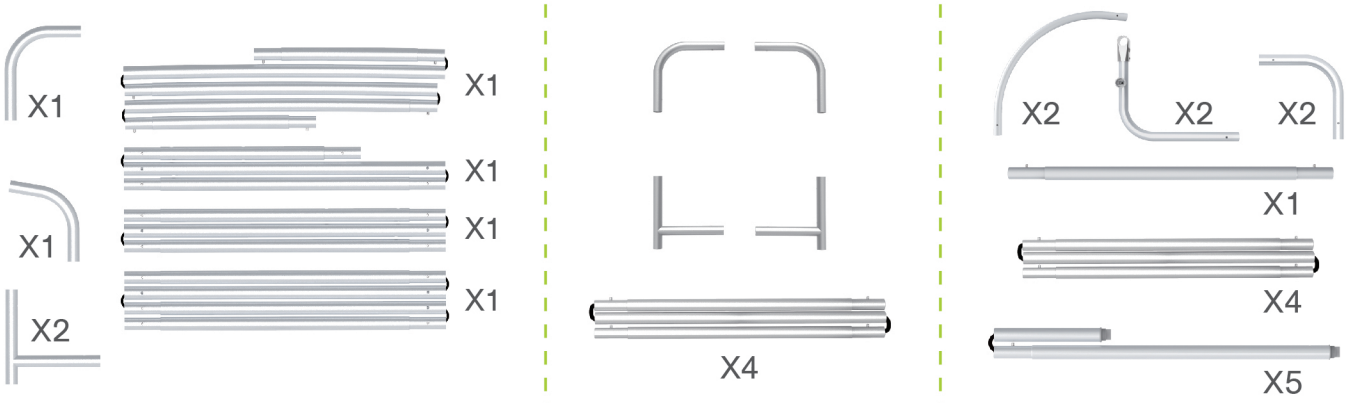

(2) Graphic printing fabric banner

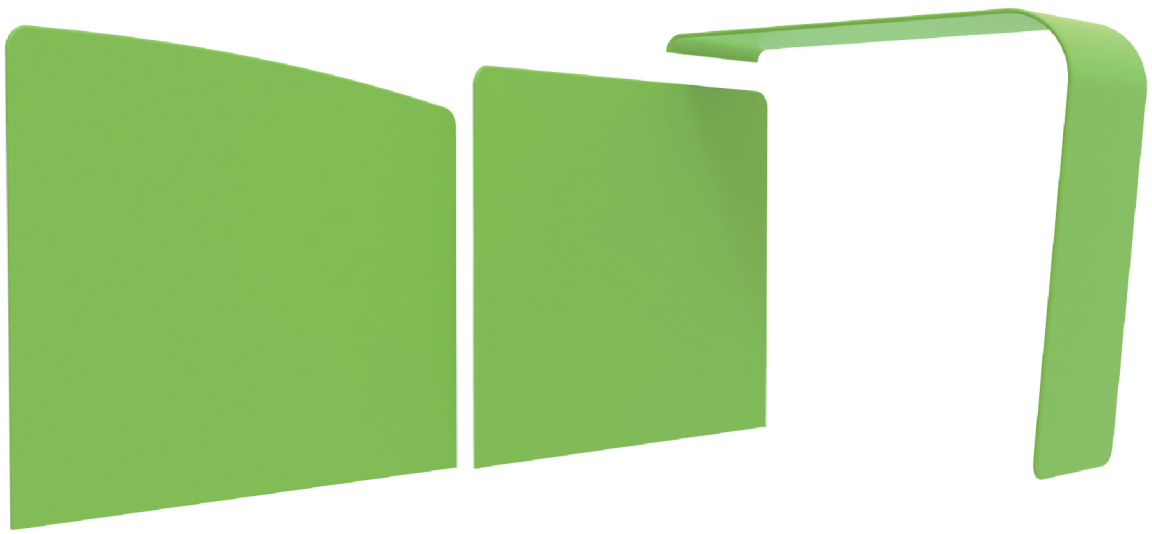

STEP 01

To connect the poles according to the labellings

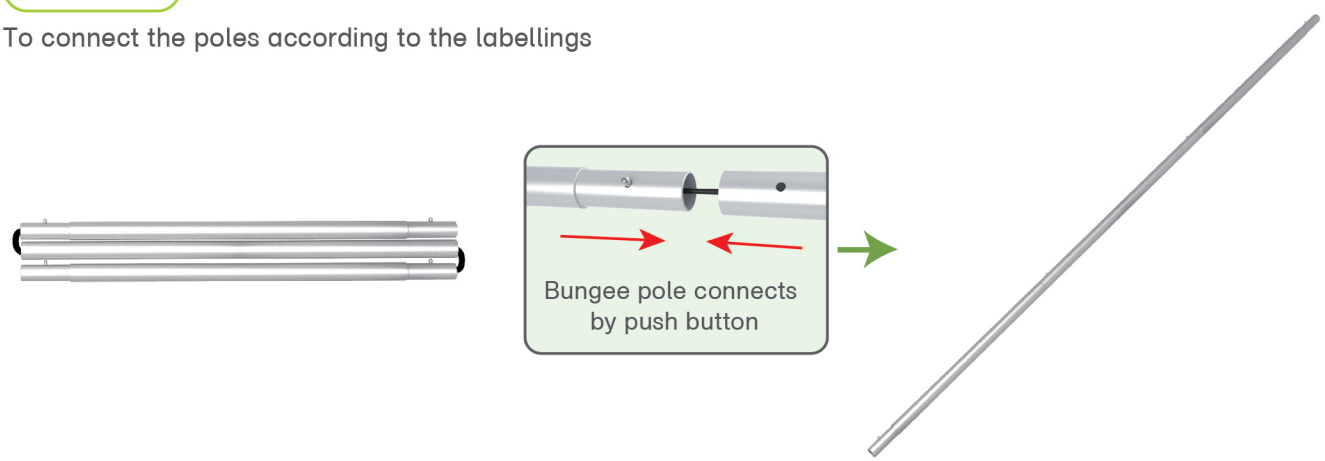

PARTS

STEP 02

To use corner pieces to connect the poles to be display stand

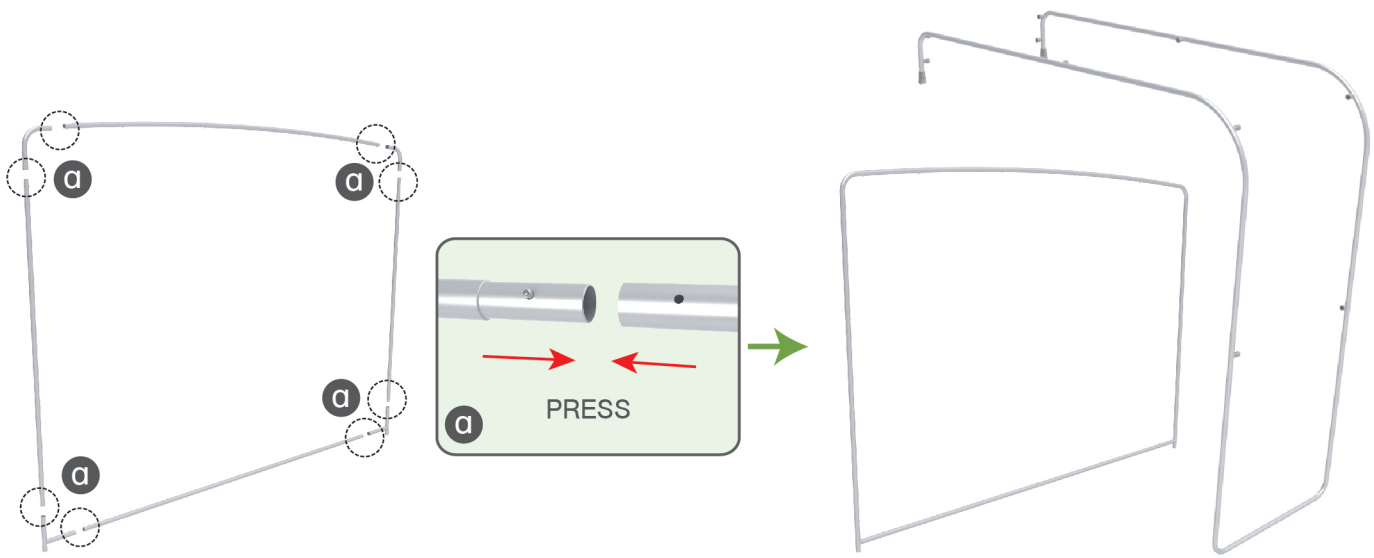

STEP 03

To assemble cross bar at the Arch stand according to the labellings

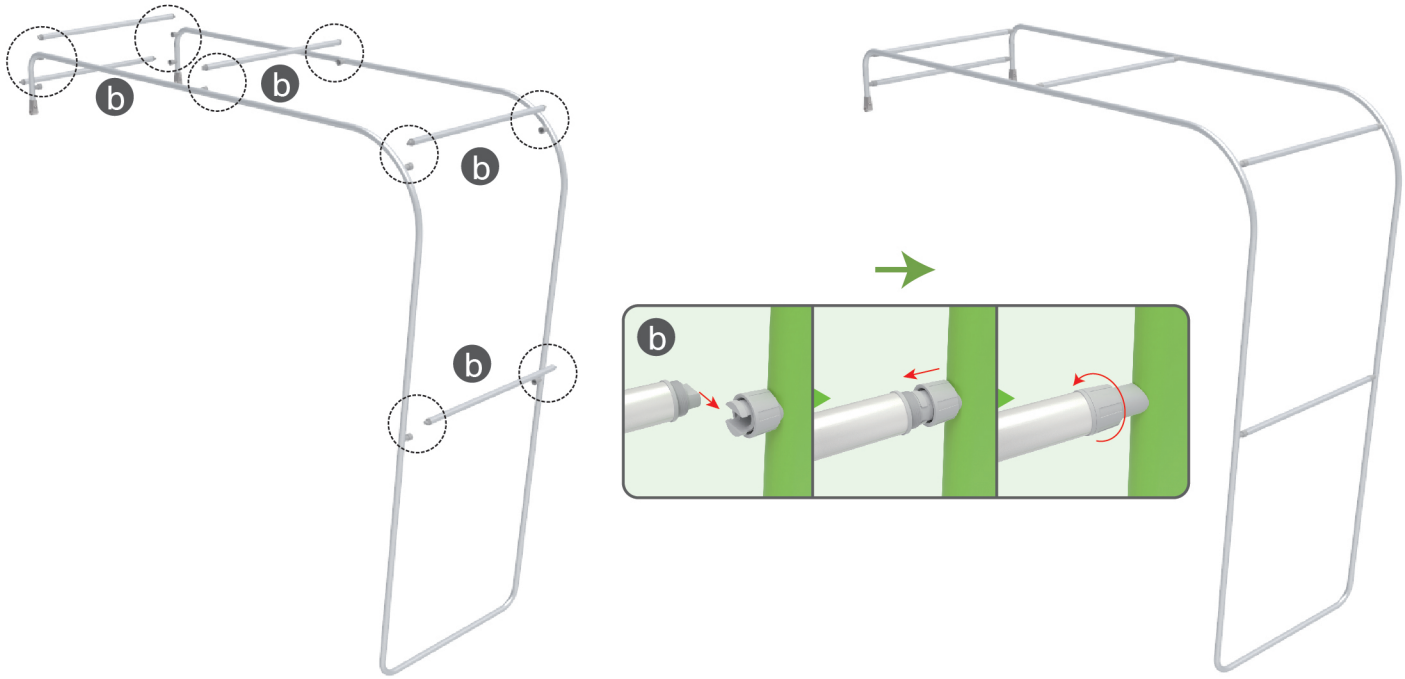

PARTS

STEP 04

To slide the fabric banner over the frame from top (bottom) and zip up at bottom (top)

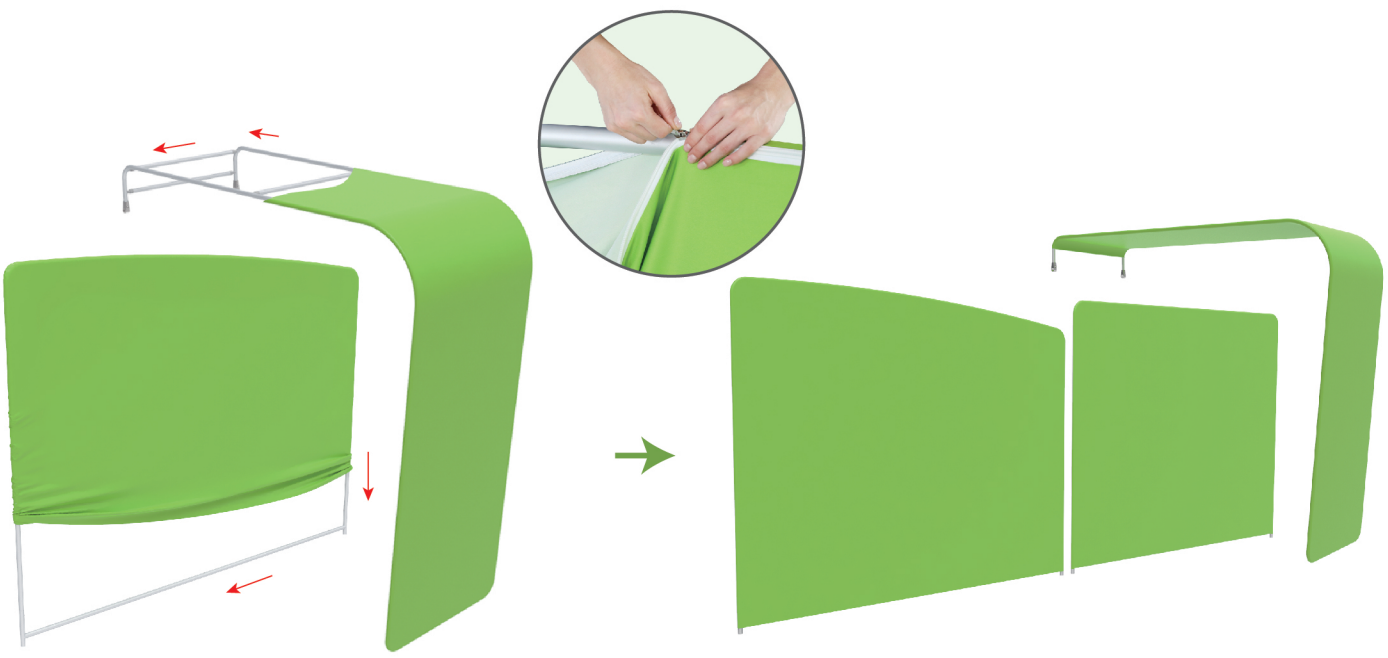

Same steps for below style of headers

Booth Set Assembly

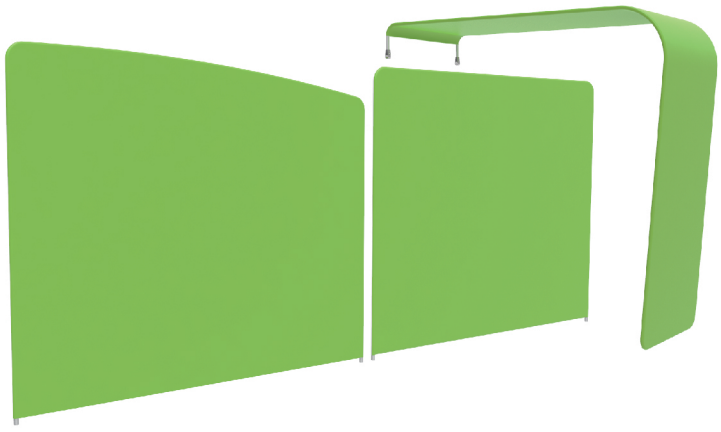



LED Light



Light Clips



X2

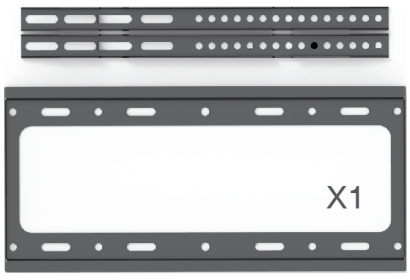

X1



A



X1



X1



X1



X1



X1

X1

PARTS

STEP 01

To install the stand feet in position

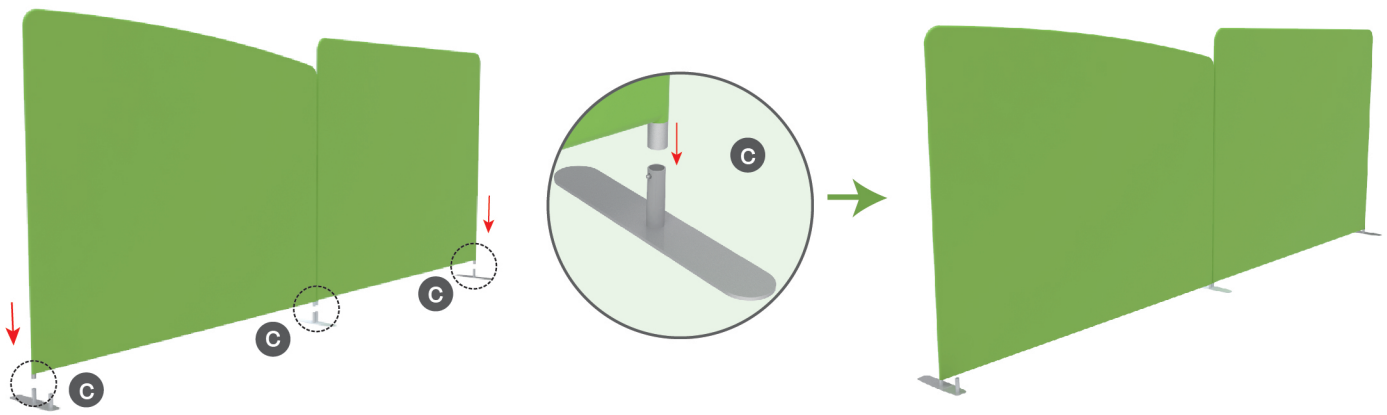

STEP 02

To loose the screw of clamp a bit and clip the Arch stand onto the back wall then fasten it

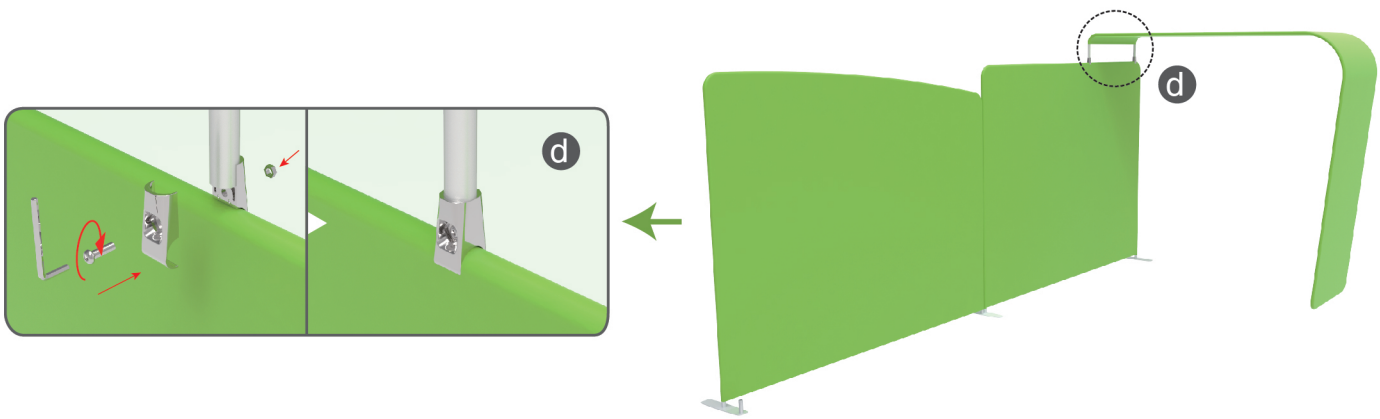

STEP 03

To use C clips in between the 2 walls and fasten by screw.

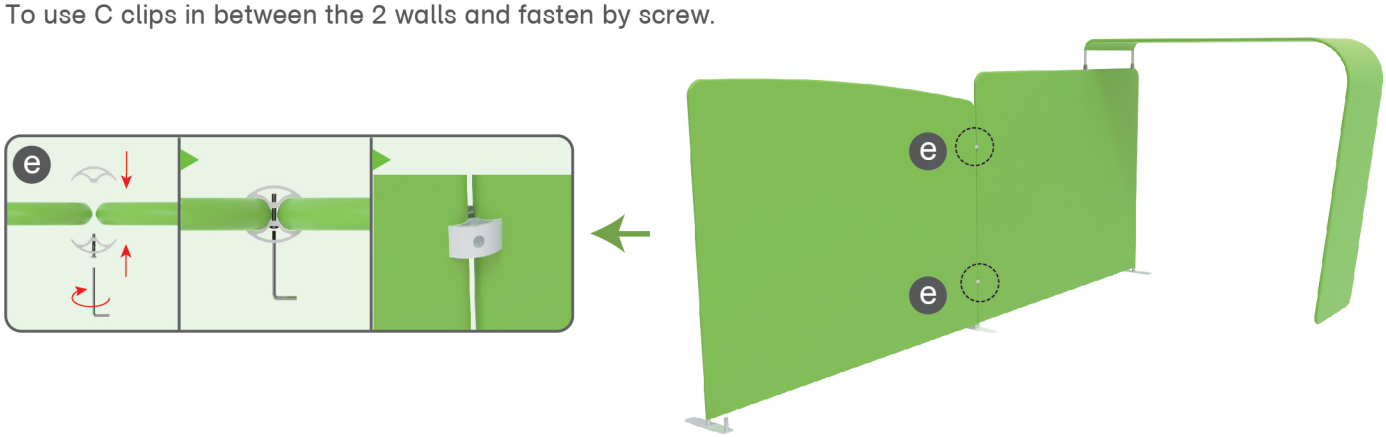

PARTS

STEP 04

To install the shelf in position

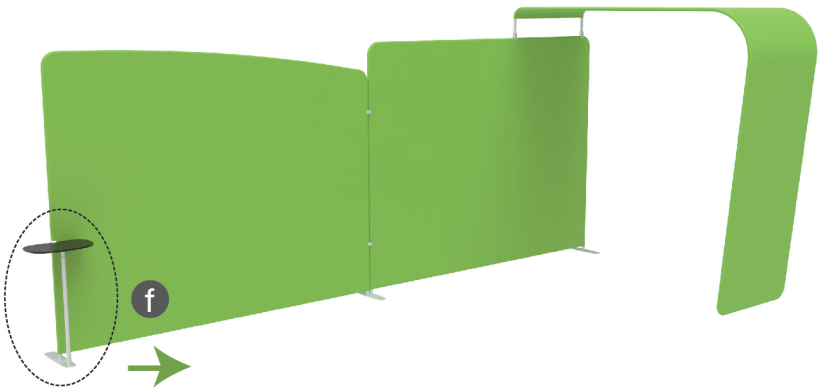

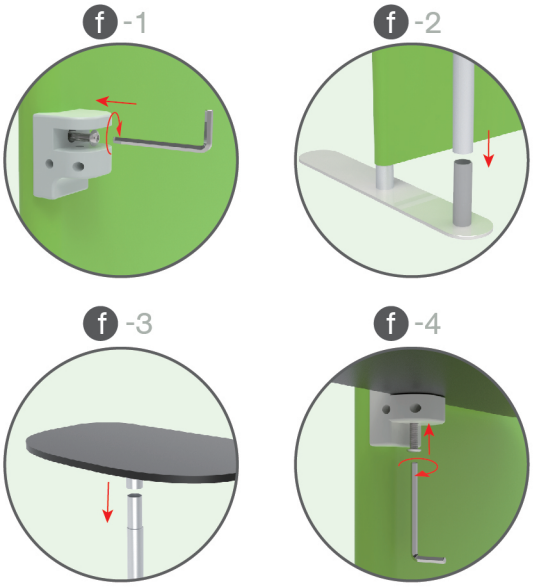

STEP 05

To install the TV mount in position



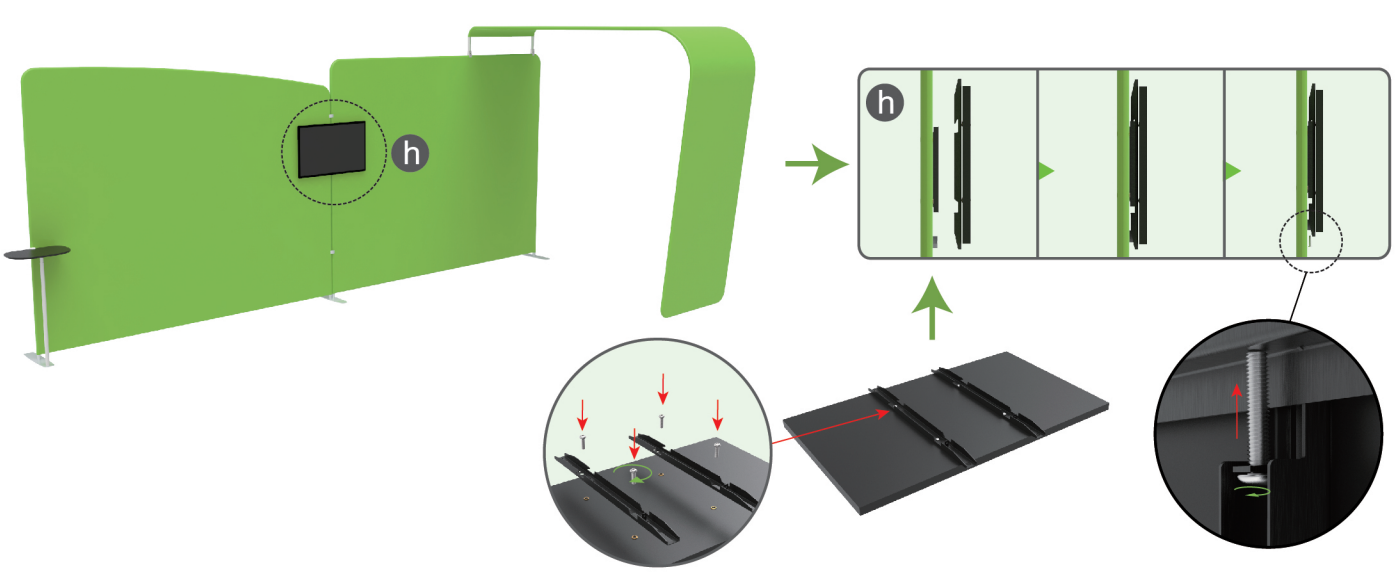

PARTS

STEP 06

Install LED light

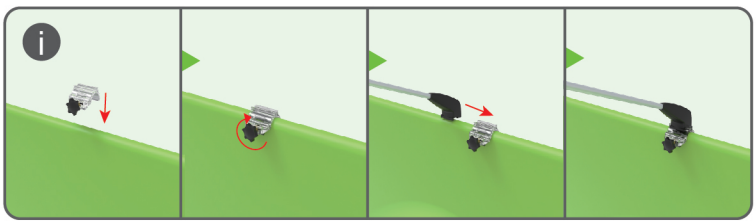

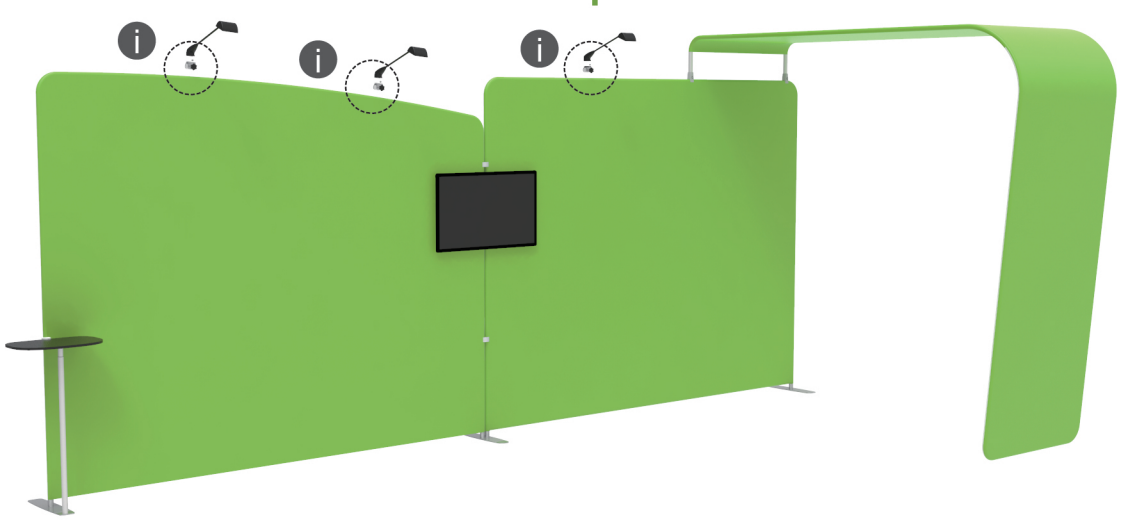



10X20ft-Booth-13