PARTS

(1) Hardware

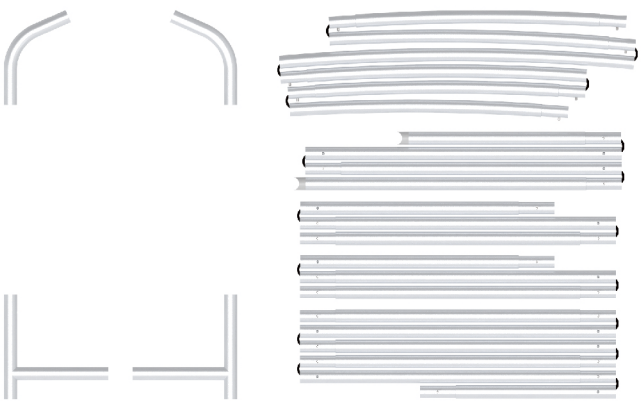

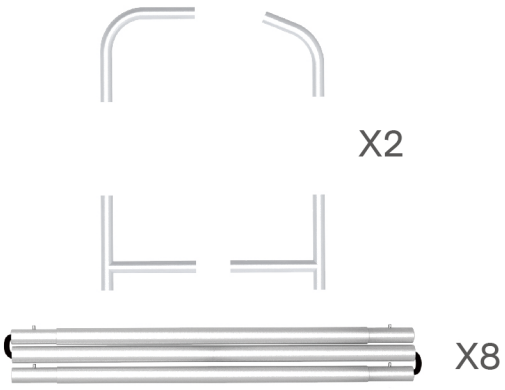

(2) Graphic printing fabric banner





STEP 01

To connect the poles according to the labellings

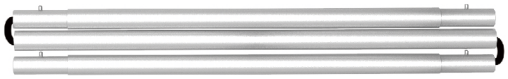

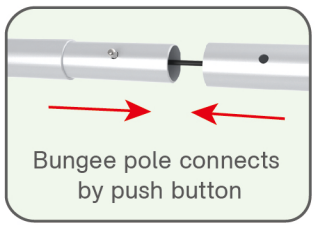

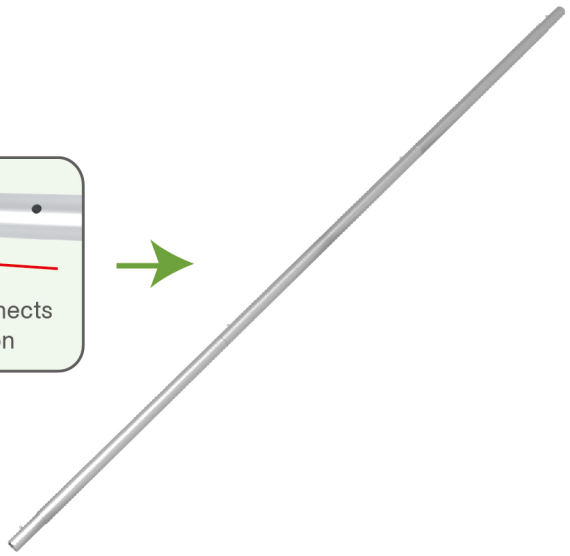

PARTS

STEP 02

To connect long poles by corner pieces according to the labellings

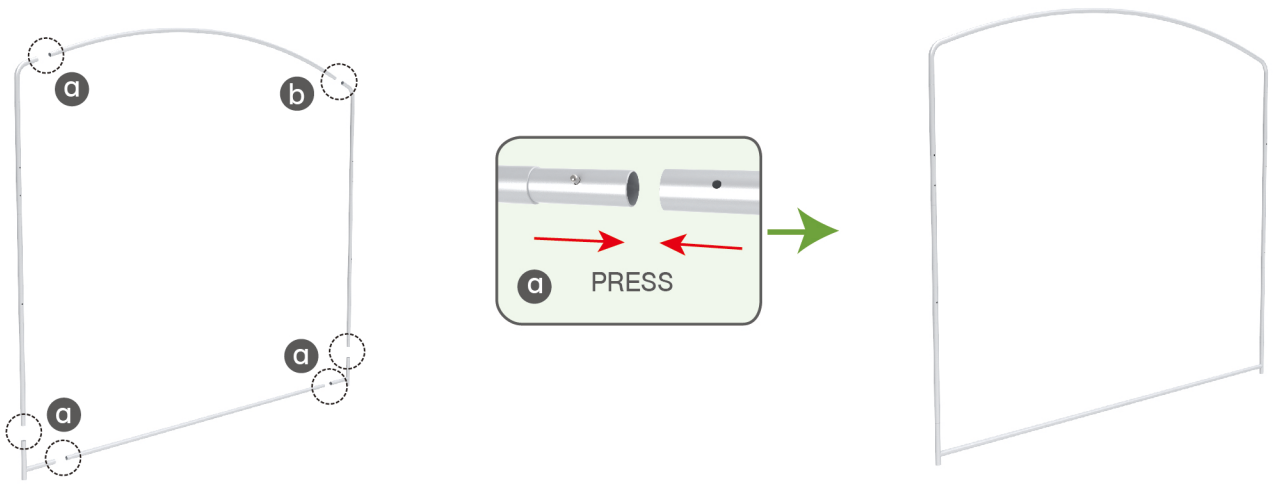

STEP 03

To slide the fabric banner on the frame from top and zip up at bottom

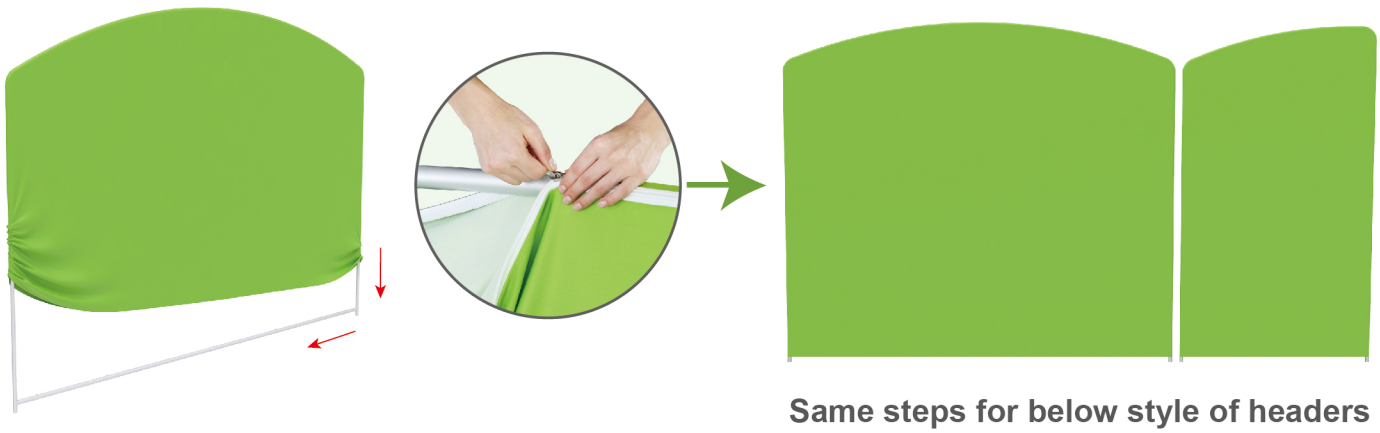

Same steps for below style of headers

Booth Set Assembly



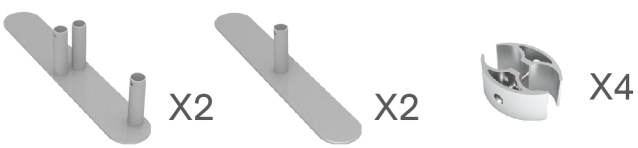

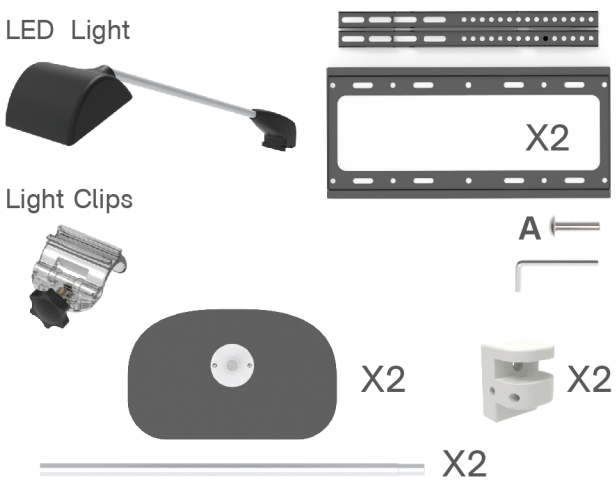

PARTS

STEP 01

To install the “double-head” feet in position to make backwalls stand together

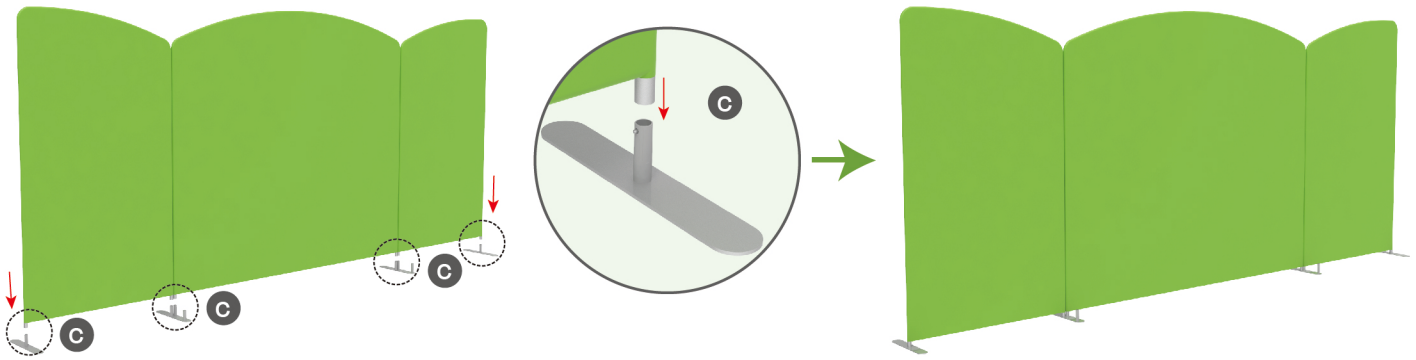

STEP 02

To put the C clip into the gap between backwalls and fasten by screws

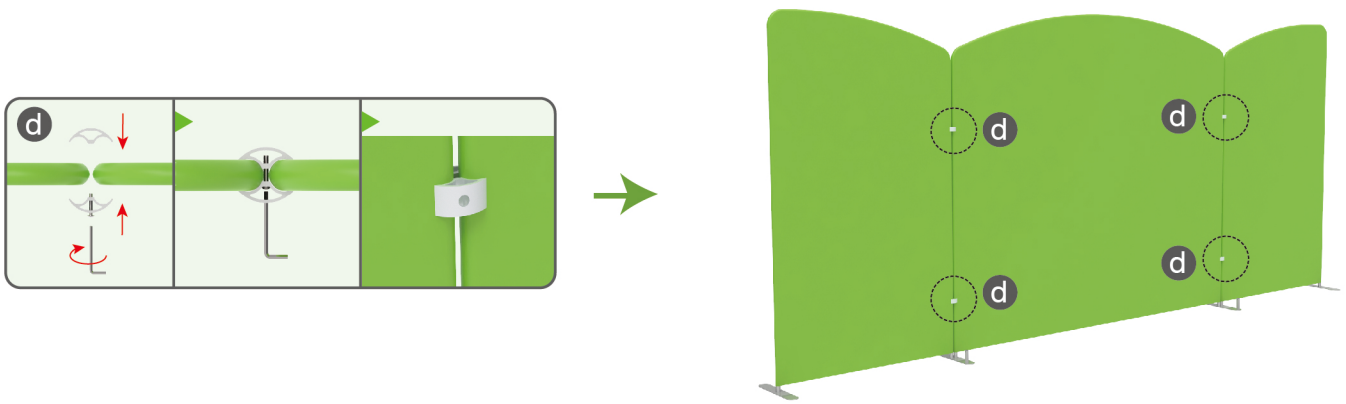

STEP 03

To install the shelves in position

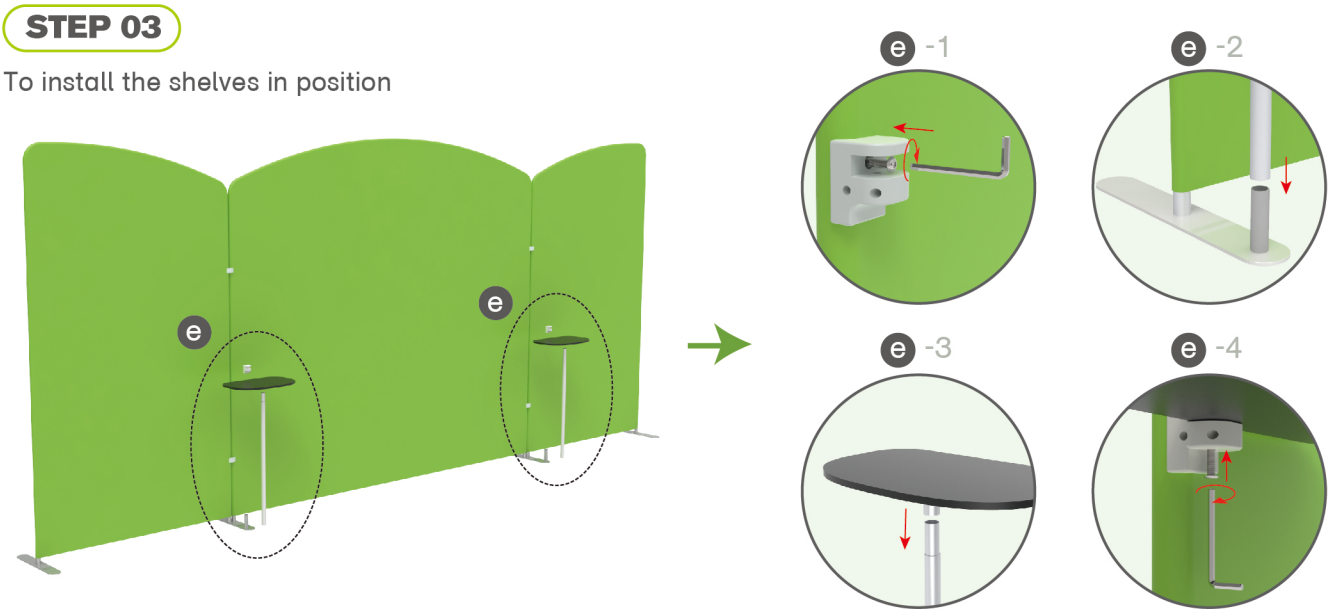

PARTS

STEP 04

To install the TV mount in position

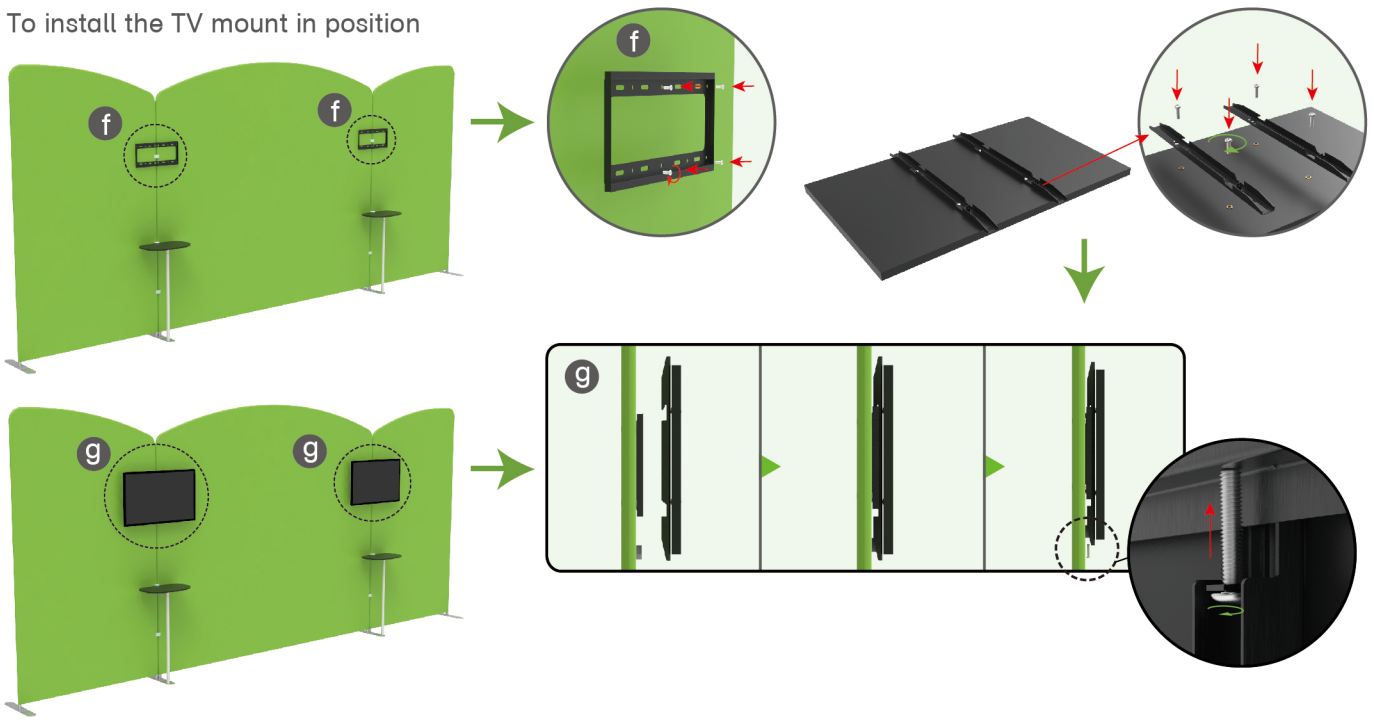

STEP 05

Install LED light

